1535 & 1545 GRAINBELT CONVEYORS - STANDARD INTAKE

PARTS LIST

SERIAL NOS. 106000 - 109499

1535 CONVEYOR GENERAL ASSEMBLY - GRAIN BELT CONVEYOR
SERIAL NOS. 106000 - 109499

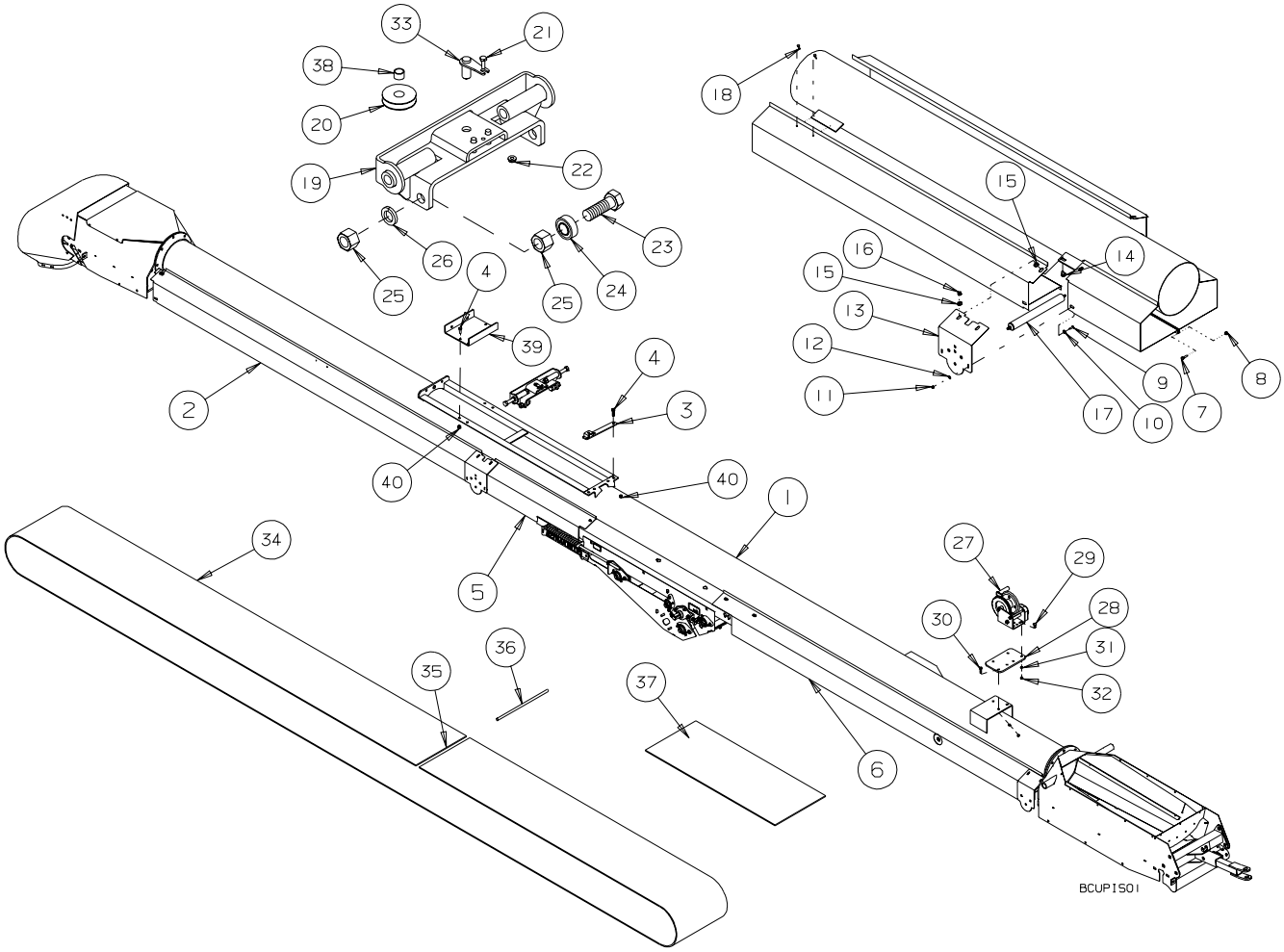

REF #	PART #	DESCRIPTION
1	C209972B	35’ TUBE ASSEMBLY
2	C201909	UPPER WIND GUARD - LEFT - 35’ - 118” LG.
NS	C201909M	UPPER WIND GUARD - RIGHT - 35’ - 118” LG.
3	C211964	TRACK STOP
4	B001040	1/2”x 1 1/4” BOLT
5	C200879	CENTRE WIND GUARD - LEFT - 35’ - 51 1/2” LG.
NS	C200879M	CENTRE WIND GUARD - RIGHT - 35’ - 51 1/2” LG.
6	C201891	LOWER WIND GUARD - LEFT - 35’ - 119” LG.
NS	C201891M	LOWER WIND GUARD - RIGHT - 35’ - 119” LG.
7	B001001	BOLT, 1/4” x 1/2” UNC GR5 PLT
8	B001124	LOCKNUT, 1/4” NYLOCK GR5
9	B001420	SCREW #10-24 x 3/4” L PANHEAD,SS
10	B027497	SHOULDER WASHER
11	B0011205	LOCKNUT, #10-24 NYLOCK
12	B0011459	FLATWASHER, #10
13	C200608	ROLLER BRACKET
14	B001082	CARRIAGE BOLT, 3/8” x 1”
15	B0011495	WASHER-SAE, 3/8”
16	B0011325	LOCKNUT 3/8” STOVER
17	B021250	ROLLER, 1.9”OD x 18”
18	B002036	#10 x 5/8” TEK SCREW
19	C211856	TRACK SLIDE
20	B008099	2.5” CABLE SHEAVE - 3/4” BORE
21	B001002	1/4” x 3/4” BOLT
22	B0011246	1/4” FLANGE LOCK NUT
23	B001101	3/4” x 2 1/2” BOLT
24	B017255	BEARING - 6203-3/4-2RS
25	B001142	3/4” HEX NUT
26	B001172	3/4” LOCK WASHER
27	B030200	BRAKE WINCH - 1500 LBS.
28	C201244	WINCH PLATE
29	B0010835	3/8”x 1 1/4” CARRIAGE BOLT
30	B001025	3/8”x 1 1/4” BOLT
31	B001165	3/8” LOCK WASHER
32	B001131	3/8” HEX NUT
33	C2110158	PIN, 5/8” OD x 1 1/4” LG
34	B018632	RUBBER BELT - 15” x 71’ 8” - LACED
35	B021321	ALLIGATOR LACING - 15” c/w PIN
36	C204584	15” LACING PIN KIT
37	B018612	RUBBER BELT - 15” WIDE x 10’ - LACED
37	B018614	RUBBER BELT - 15” WIDE x 20’ - LACED
37	B018616	RUBBER BELT - 15” WIDE x 29’-6” - LACED
38	B017753	BUSHING, POLYMER, 5/8” OD
39	C213106	TRANSPORT STOP
40	B001134	1/2” STOVER LOCK NUT
NS	B008391	1/4” LIFT CABLE x 34’

1545 CONVEYOR ASSEMBLY - GRAIN BELT CONVEYOR
SERIAL NOS. 106000 - 109499

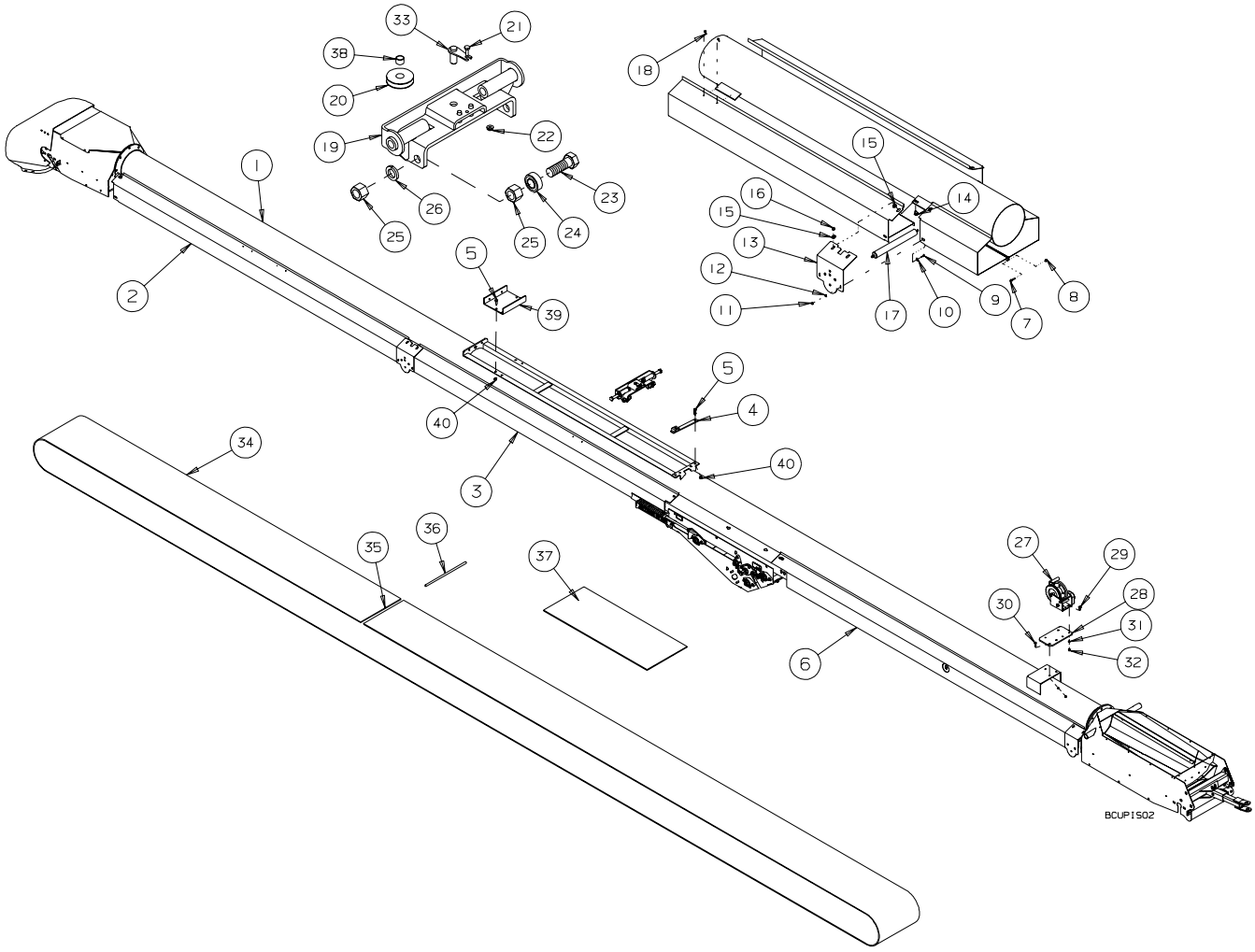

REF #	PART #	DESCRIPTION
1	C209848B	45’ TUBE ASSEMBLY
2	C201899	UPPER WIND GUARD - LEFT - 45’ - 133 3/8” LG.
NS	C201899M	UPPER WIND GUARD - RIGHT - 45’ - 133 3/8” LG.
3	C201978	CENTRE WIND GUARD - LEFT - 45’ - 133 3/8” LG.
NS	C201978M	CENTRE WIND GUARD - RIGHT - 45’ - 133 3/8” LG.
4	C211964	TRACK STOP
5	B001040	1/2” x 1 1/4” BOLT
6	C201977	LOWER GAS WIND GUARD - LEFT - 45’ - 141 5/8” LG.
NS	C201977M	LOWER GAS WIND GUARD - RIGHT - 45’ - 141 5/8” LG.
7	B001001	BOLT, 1/4” x 1/2” UNC GR5 PLT
8	B001124	LOCKNUT, 1/4” NYLOCK GR5
9	B001420	SCREW #10-24 x 3/4” L PANHEAD,SS
10	B027497	SHOULDER WASHER
11	B0011205	LOCKNUT, #10-24 NYLOCK
12	B0011459	FLATWASHER, #10
13	C200608	ROLLER BRACKET
14	B001082	CARRIAGE BOLT, 3/8” x 1”
15	B0011495	WASHER-SAE, 3/8”
16	B0011325	LOCKNUT 3/8” STOVER
17	B021250	ROLLER, 1.9” OD x 18”
18	B002036	#10 x 5/8” TEK SCREW
19	C211856	TRACK SLIDE
20	B00899	2.5” CABLE SHEAVE - 3/4” BORE
21	B001002	1/4” x 3/4” BOLT
22	B0011246	1/4” FLANGE LOCK NUT
23	B001101	3/4” x 2 1/2” BOLT
24	B017255	BEARING - 6203-3/4-2RS
25	B001142	3/4” HEX NUT
26	B001172	3/4” LOCK WASHER
27	B030200	BRAKE WINCH - 1500 LBS.
28	C201244	WINCH PLATE
29	B0010835	3/8”x 1 1/4” CARRIAGE BOLT
30	B001025	3/8”x 1 1/4” BOLT
31	B001165	3/8” LOCK WASHER
32	B001131	3/8” HEX NUT
33	C2110158	PIN, 5/8” OD x 1 1/4” LG
34	B0186346	RUBBER BELT - 15” x 91’ 8” - LACED
35	B021321	ALLIGATOR LACING - 15” c/w PIN
36	C204584	15” LACING PIN KIT
37	B018612	RUBBER BELT - 15” WIDE x 10’ - LACED
37	B018614	RUBBER BELT - 15” WIDE x 20’ - LACED
37	B018616	RUBBER BELT - 15” WIDE x 29’-6” - LACED
38	B017753	BUSHING, POLYMER, 5/8” OD
39	C213106	TRANSPORT STOP
40	B001134	1/2” STOVER LOCK NUT
NS	B008391	1/4” LIFT CABLE x 34’

INTAKE ASSEMBLY - GRAIN BELT CONVEYOR
SERIAL NOS. 106000 - 109499

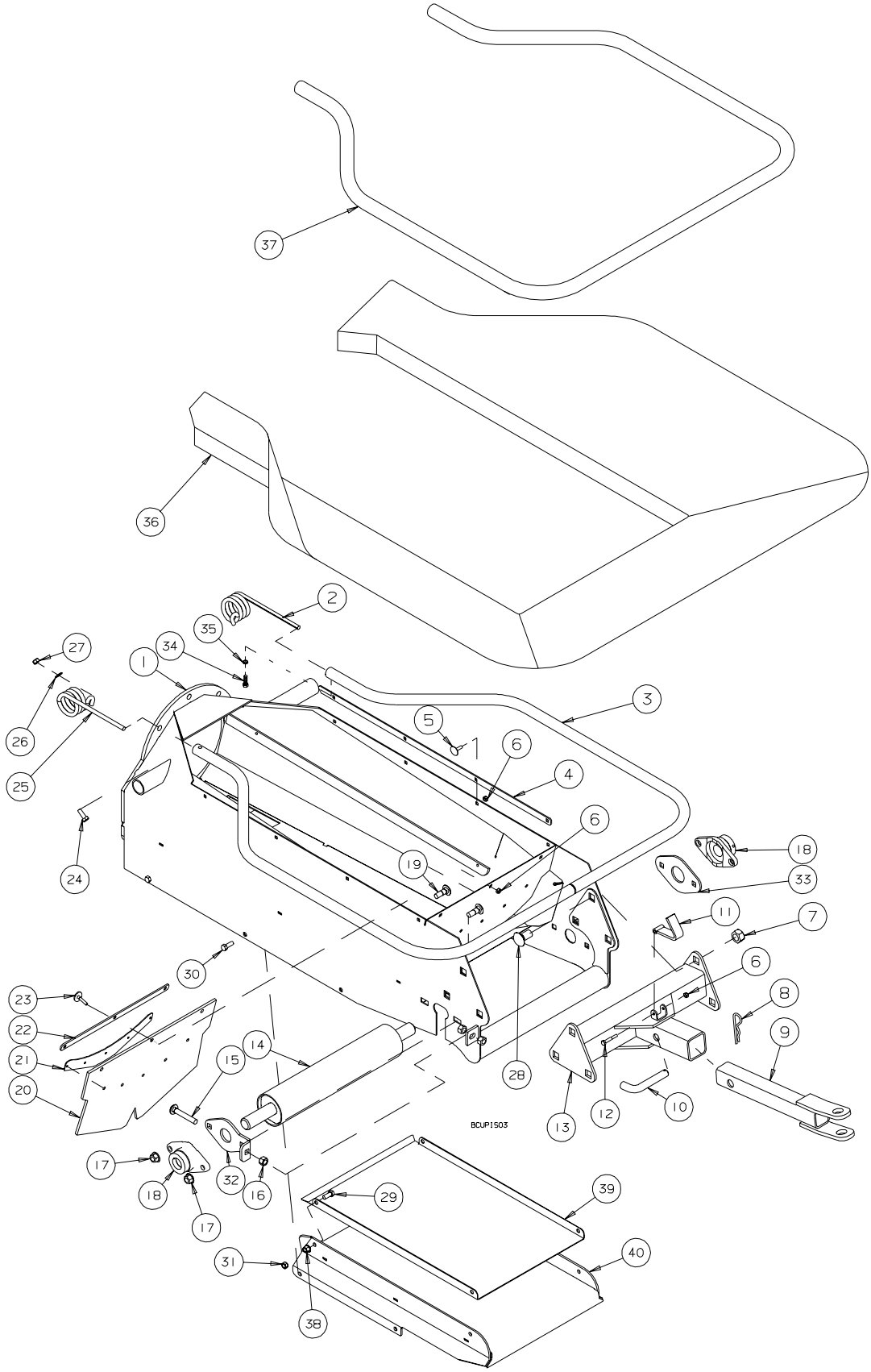

REF #	PART #	DESCRIPTION
1	C201790	10" HOPPER- CUPPED
2	B021740R	SPRING, HOPPER R, 1/2” DIA
3	C200791	HOPPER RAIL
4	C200613	HOPPER STRAP LONG
5	B002227	ELEVATOR BOLT, 1/4” x 3/4”
6	B001124	LOCKNUT, 1/4” NYLOCK GR5
7	B001154	LOCKNUT, 3/4” STOVER
8	B002091	HAIRPIN, .177” x 3 3/4”
9	C201227	HITCH - MALE
10	B0020315	L PIN, 3/4” x 4 1/8” w/HOLE
11	C201785	FLIP RESTRAINT
12	B001004	BOLT, 1/4” x 1 3/4” UNC GR5 PLT
13	C201238	HITCH - FEMALE
14	C200708	ROLLER - 3 1/2" x 16 1/2”
15	B001091	CARRIAGE BOLT, 1/2” x 3” FULL THREAD
16	B001135	NUT, 1/2” HEX
17	B001409	SERRATED FLANGE NUT, 1/2”
18	B0172015	BEARING, 1 1/4"-206, 2 BOLT FLANGE
19	B0010885	CARRIAGE BOLT, 1/2” x 1 1/2” - SHORT NECK
20	B0275165	FLASHING, MAIN REAR, 2 PLY RUBBER
21	C200612	FLASHING PLATE
22	C200614	HOPPER END
23	B002226	ELEVATOR BOLT, 1/4” x 1”
24	B001040	BOLT, 1/2” x 1 1/4”
25	B021740L	SPRING, HOPPER L, 1/2” DIA
26	B001152	WASHER-SAE, 1/2”
27	B001134	LOCKNUT, 1/2” STOVER
28	B001098	CARRIAGE BOLT, 3/4" x 2"
29	B001023	BOLT, 3/8” x 3/4”
30	B001024	BOLT, 3/8” x 1”
31	B001132	LOCKNUT, 3/8”
32	C200615	SHAFT GUARD- 1.25"
33	C200609	BEARING PLATE
34	B001025	BOLT, 3/8” x 1 1/4”
35	B001130	JAM NUT, 3/8”
36	B021420	HOPPER FABRIC - BLACK
37	B024081	1” ID x 90” LONG FLEXIBLE CONDUIT
38	B0011326	3/8” FLANGE LOCK NUT
39	C205149	15S LONG TRACKING TOP
40	C205143	15S BELT TRACKING BOX

DISCHARGE ASSEMBLY - GRAIN BELT CONVEYOR
SERIAL NOS. 106000 - 109499

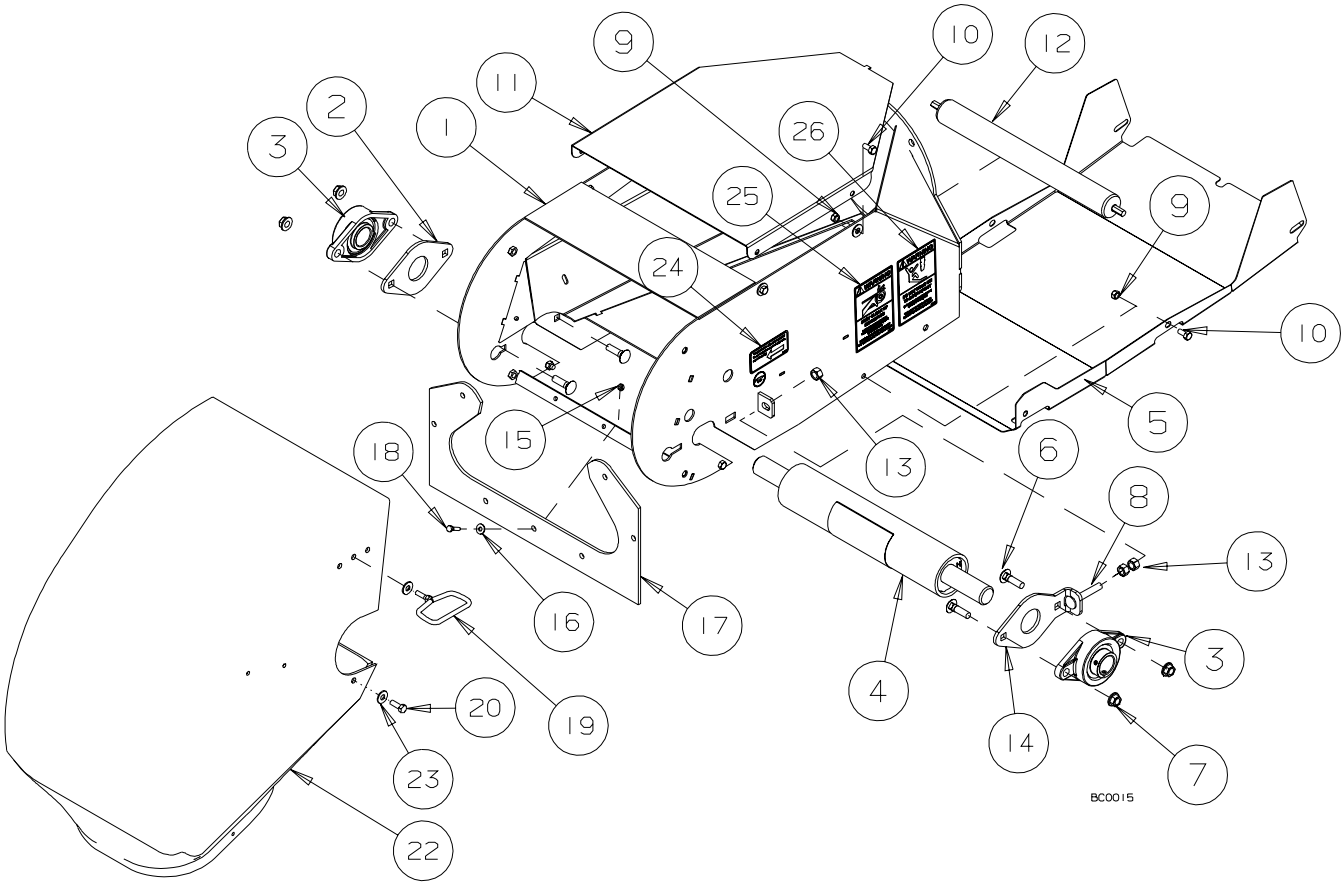

REF #	PART #	DESCRIPTION
1	C206717H	DISCHARGE 65', 75'
2	C2060032	BEARING PLATE
3	B017223	BEARING, 1 1/2” - 2 BOLT FLNG INA
4	C2060003	ROLLER, 3 1/2” x 16 1/2” - 1 1/2” SHAFT
5	C200605	DISCHARGE BOTTOM GUARD
6	B001089	CARRIAGE BOLT, 1/2” x 1 3/4”
7	B001409	1/2” SERRATED FLANGE NUT
8	B001091	CARRIAGE BOLT, 1/2” x 3”
9	B0011325	LOCKNUT, 3/8” STOVER
10	B001024	BOLT, 3/8” x 1” UNC GR5 PLT.
11	C200644	DISCHARGE CAP MAIN
12	B021250	ROLLER, 1.9" OD x 18"
13	B001135	NUT, 1/2” HEX
14	C200611	SHAFT GUARD - 1.5"
15	B001124	LOCKNUT, 1/4” NYLOCK GR5
16	B001147	FLATWASHER, 1/4”
17	B0275195	WIPER, DISCHARGE, 2 PLY RUBBER
18	B001003	BOLT, 1/4” x 1” UNC GR5 PLT
19	C200797	DISCHARGE HANDLE
20	B001024	BOLT, 3/8” x 1” UNC GR5 PLT
22	B027600	DISCHARGE SPOUT, 10" TUBE
23	B001149	FLATWASHER, 3/8”
24	B0294501	LEFT TRACKING DECAL
25	B029966	CONVEYOR DISCHARGE DECAL
26	B029967	DOWNSPOUT WARNING DECAL

S DRIVE ASSEMBLY - GRAIN BELT CONVEYOR
SERIAL NOS. 106000 - 109499

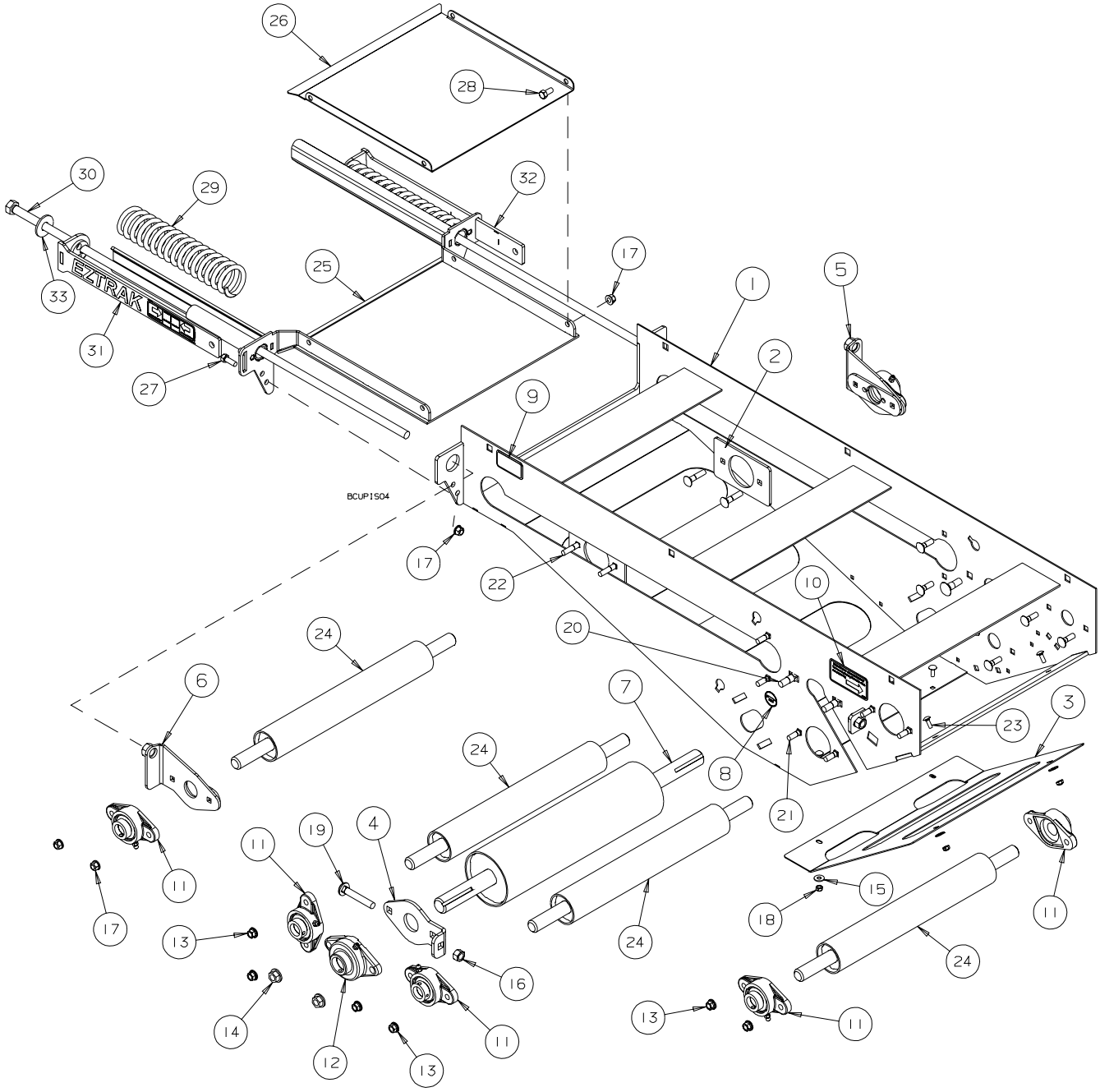

REF #	PART #	DESCRIPTION
1	C206845	SMALL S-DRIVE BODY WELDMENT
2	C206636	BACK PLATE
3	C206316	SMALL S-DRIVE GUARD
4	C200615	SHAFT GUARD - 1.25”
5	C2060002L	SMALL S-DRIVE SDJUSTER - LEFT
6	C2060002R	SMALL S-DRIVE SDJUSTER - RIGHT
7	C200846	5” DIA DRIVE ROLLER - KEYED
8	B029950	GREASE DECAL - 8 HRS
9	B029494	SMALL PATENT PENDING DECAL
10	B029450	RIGHT TRACKING DECAL
11	B017050	1” DIA BEARING - 2 BOLT
12	B0172015	1 1/4” DIA BEARING - 2 BOLT
13	B001405	3/8” SERRATED FLANGE NUT
14	B001409	1/2” SERRATED FLANGE NUT
15	B001147	1/4” FLATWASHER
16	B001135	1/2” HEX NUT
17	B0011326	3/8” FLANGE LOCK NUT
18	B001124	1/4” LOCK NUT
19	B001091	1/2”x 3” CARRIAGE BOLT - FULL THREAD
20	B0010885	1/2”x 1 1/2” SHORT NECK CARRIAGE BOLT
21	B0010835	3/8”x 1 1/4” CARRIAGE BOLT
22	B001084	3/8”x 1 3/4” CARRIAGE BOLT
23	B0010499	1/4”x 3/4” CARRIAGE BOLT
24	C206847	UNLOAD TAKEUP ROLLER
25	C205587	LOWER S-DRIVE BELT GUIDE
26	C205144	UPPER S-DRIVE BELT GUIDE
27	B001024	3/8” x 1” BOLT
28	B001023	3/8” x 3/4” BOLT
29	B0210731	COMPRESSION SPRING - 2 1/2” OD x 16” LONG x .343” WIRE
30	B0026018	5/8”x 41 1/2” BOLT - FULL THREAD
31	C205594L	SPRING TENSION GUAGE - LEFT
32	C205594R	SPRING TENSION GUAGE - RIGHT
33	B001153	5/8” FLATWASHER

UNDERCARRIAGE ASSEMBLY - GRAIN BELT CONVEYOR
SERIAL NOS. 106000 - 109499

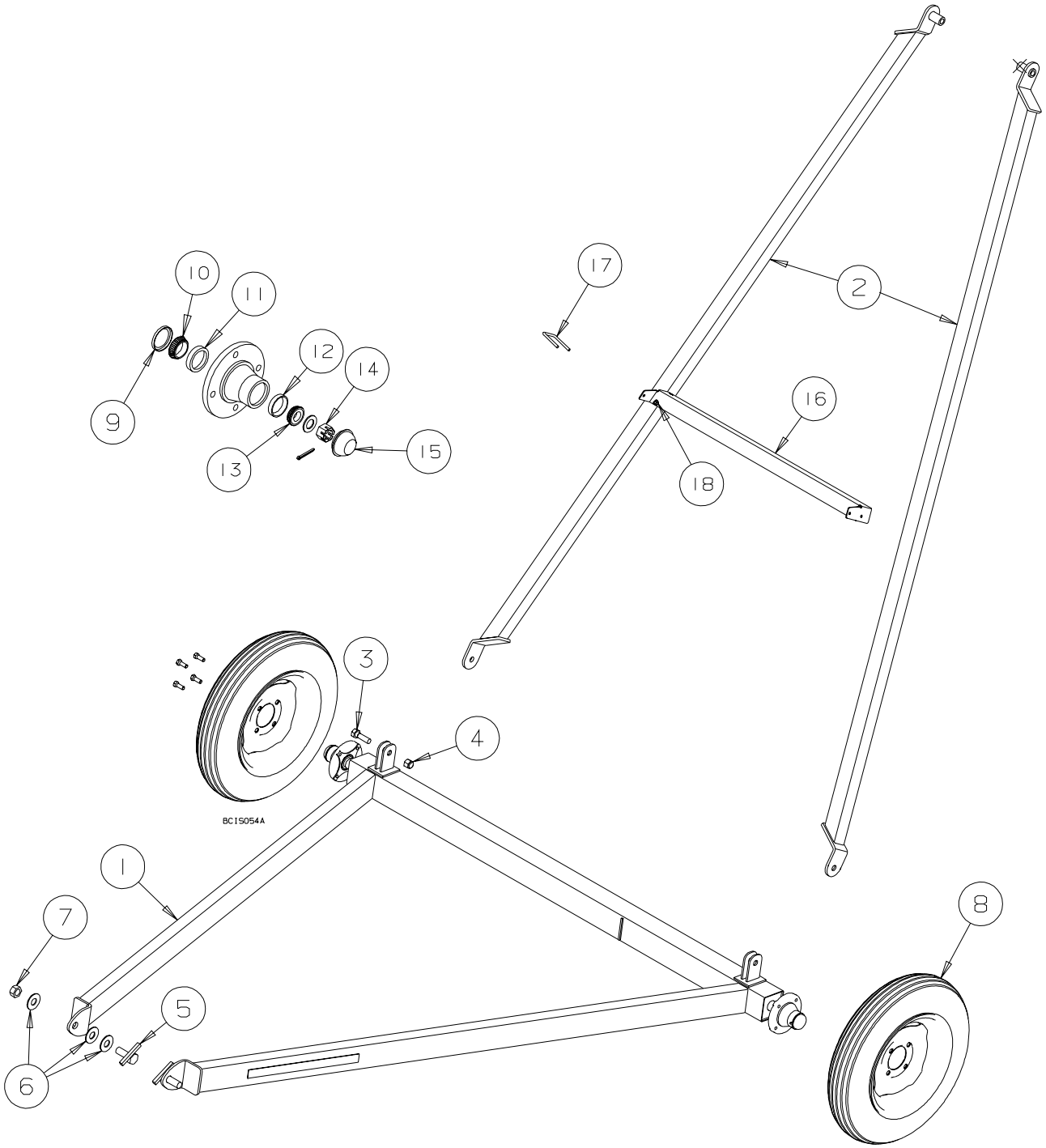

REF #	PART #	DESCRIPTION
1	C201970	35’ AXLE FRAME WELDMENT
1	C200868	45’ AXLE FRAME WELDMENT
2	C201971	35’ A-FRAME ARM
2	C200860	45’ A-FRAME ARM
3	B001101	3/4”x 2 1/2” BOLT
4	B001154	3/4” STOVER LOCK NUT
5	C200666	SUSPENSION BOLT
6	B001159	1” FLAT WASHER
7	B001075	1” STOVER LOCK NUT
8	B011205	15” TIRE & RIM ASSEMBLY
9	B011604	GREASE SEAL - 411 HUB
10	B011603	INNER BEARING - LM67048
11	B011602	INNER CUP - LM67010
12	B011600	OUTER CUP - LM11910
13	B011601	OUTER BEARING - LM11949
14	B011677	3/4” CASTLE NUT
15	B011500	DUST CAP - 411 HUB
16	C206024	35’ A-FRAME CROSS BRACE
16	C206022	45’ A-FRAME CROSS BRACE
17	B002011	5/16” x 2 1/2” SQ. U-BOLT
18	B0011275	5/16” STOVER LOCK NUT

ELECTRIC MOTOR DRIVE KIT - GRAIN BELT CONVEYOR
SERIAL NOS. 106000 - 109499

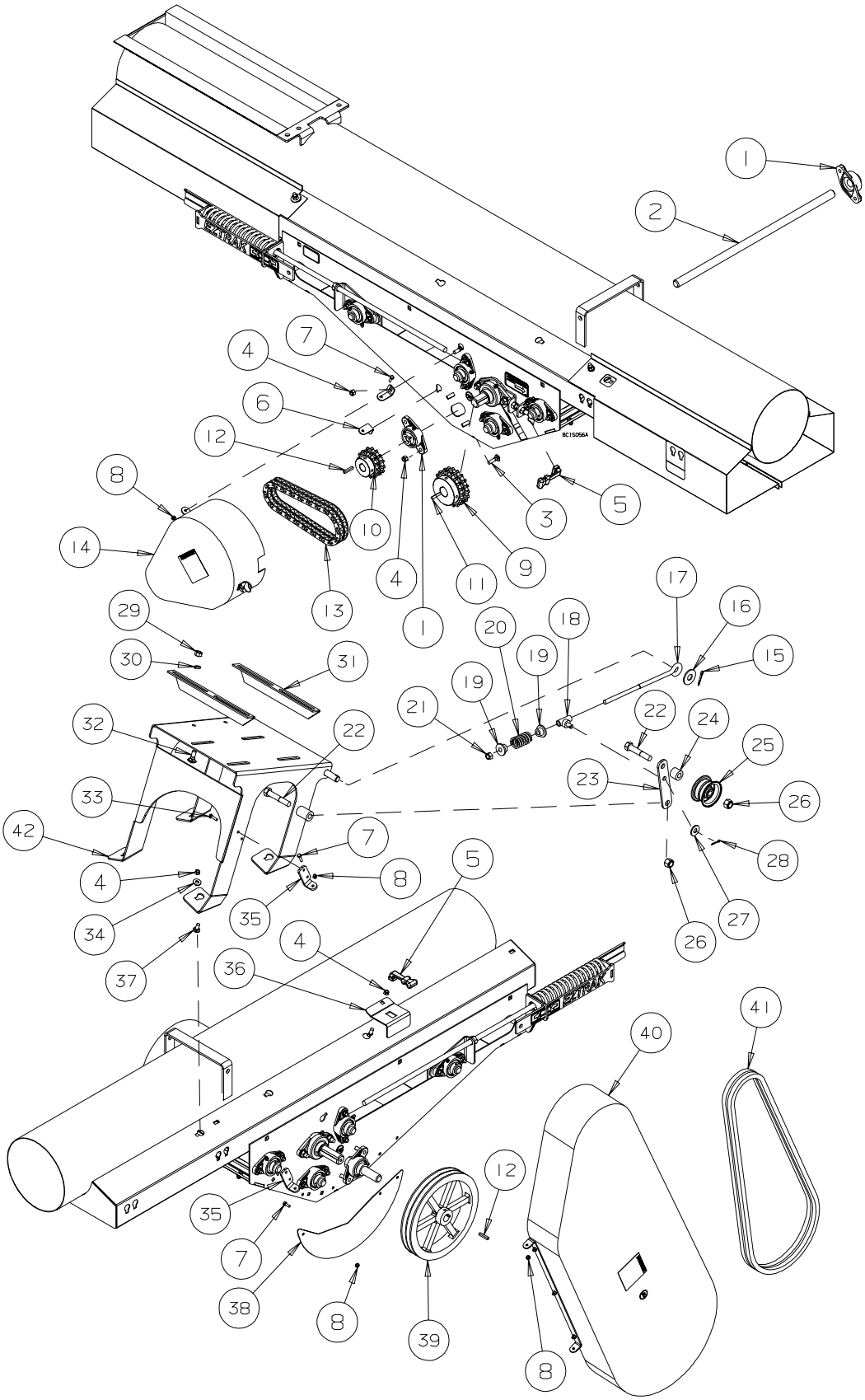

REF #	PART #	DESCRIPTION
1	B017050	1” DIA. BEARING - 2 BOLT
2	B011833	1” UNLOADER JACK SHAFT
3	B001083	3/8”x 1 1/2” CARRIAGE BOLT
4	B0011325	3/8” STOVER LOCK NUT
5	B0219992	RUBBER LATCH
6	C206025	HINGE MOUNT
7	B001002	1/4”x 3/4” BOLT
8	B001124	1/4” LOCK NUT
9	B0090106	D60-19 SPROCKET x 1 1/4” BORE
9	B0090108	D60-23 SPROCKET x 1 1/4” BORE
10	B0090276	D60-14 SPROCKET x 1” BORE
11	B689169	1/4” KEY x 1 1/2” LG.
12	B689169	1/4” KEY x 1 1/2” LG.
13	B0090136	R60-2 CHAIN x 39 PITCH
14	C206203	PLASTIC CHAIN GUARD ASSEMBLY
15	B002047	3/16”x 1 1/4” COTTER PIN
16	B001155	3/4” FLAT WASHER
17	B0020275	1/2” EYEBOLT x 12 5/8” LG.
18	B496521	BELT TENSIONER TUBE
19	B496735	SPRING CAP
20	B021082	COMPRESSION SPRING - 1.42” OD x 3.68” LG - .187” WIRE
21	B001134	1/2” STOVER LOCK NUT
22	B001073	5/8”x 3 1/2” BOLT
23	C201250	IDLER ARM
24	C201240	IDLER SPACER
25	B018044	IDLER PULLEY - 5/8” BORE
26	B001141	5/8” LOCK NUT
27	B001151	1/2” FLAT WASHER
28	B0020485	1/8”x 1” COTTER PIN
29	B001135	1/2” HEX NUT
30	B001167	1/2” LOCK WASHER
31	B695298	MOTOR MOUNT BRACKET
32	B0010875	1/2”x 1 1/4” CARRIAGE BOLT
33	B001003	1/4”x 1” BOLT
34	B001149	3/8” FLAT WASHER
35	C206214	GUARD HINGE
36	C206217	HINGE STOP BOTTOM
37	B001082	3/8”x 1” CARRIAGE BOLT
38	C206212	PULLEY COVER
39	B018032	2B12.0 PULLEY - 1” BORE
40	C201209	PLASTIC BELT GUARD
41	B0180675	B-98 BELT
42	C200853	MOTOR MOUNT - 35’, 45’

GAS ENGINE DRIVE KIT - GRAIN BELT CONVEYOR
SERIAL NOS. 106000 - 109499

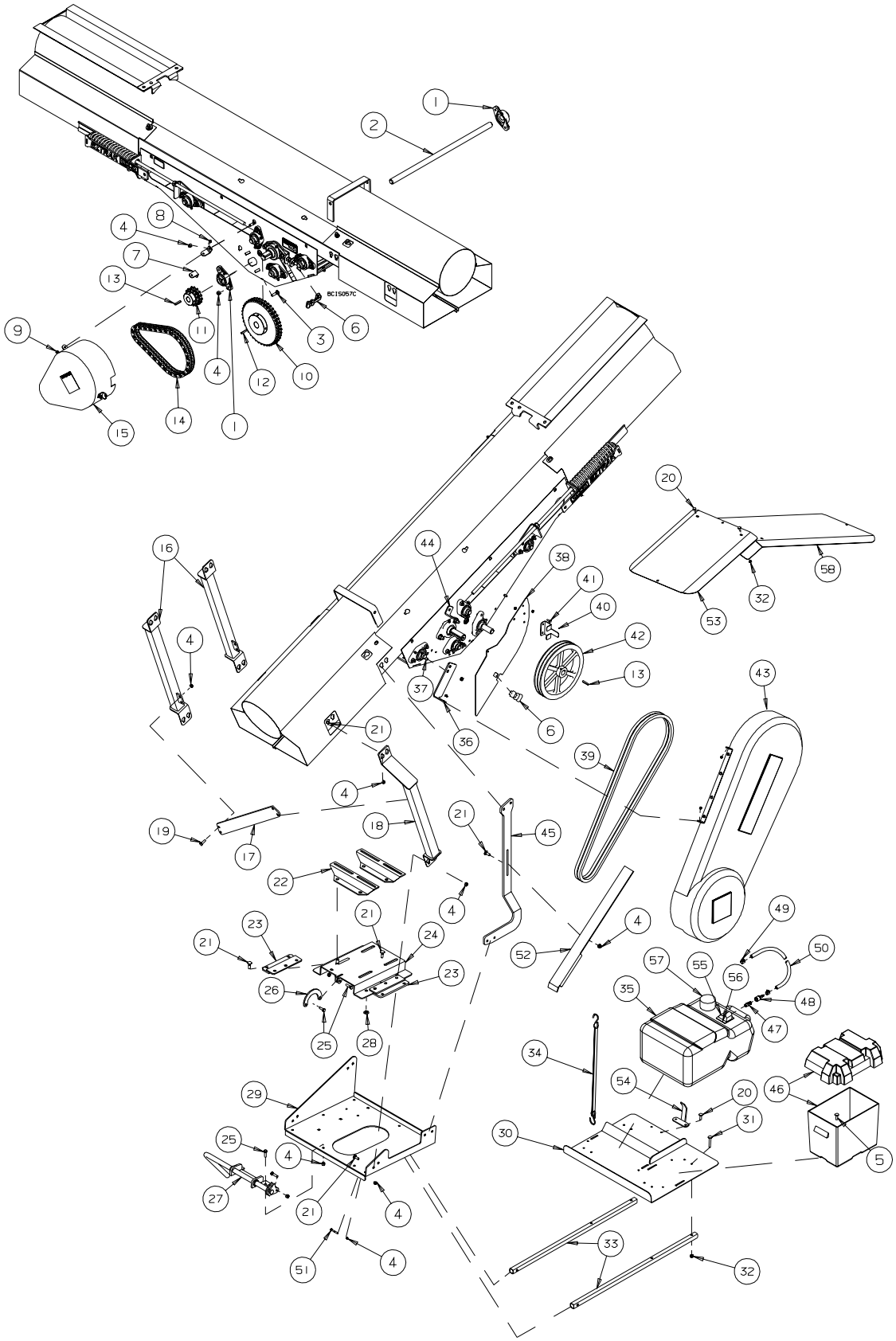

REF #	PART #	DESCRIPTION
1	B017050	1” DIA. BEARING - 2 BOLT
2	B011833	1” UNLOADER JACK SHAFT
3	B001083	3/8”x 1 1/2” CARRIAGE BOLT
4	B0011325	3/8” STOVER LOCK NUT
5	B002226	1/4”x 1” ELEVATOR BOLT
6	B0219992	RUBBER LATCH
7	C206025	HINGE MOUNT
8	B001002	1/4”x 3/4” BOLT
9	B001124	1/4” LOCK NUT
10	B0092575	D60-40 SPROCKET x 1 1/4” BORE
11	B0090276	D60-14 SPROCKET x 1” BORE
12	B194012	5/16” KEY x 1 1/2” LG.
13	B689169	1/4” KEY x 1 1/2” LG.
14	B0090146	R60-2 CHAIN x 52 PITCH
15	C206203	PLASTIC CHAIN GUARD ASSEMBLY
16	C200933	MOTOR ARM
17	C201205	ENGINE LINK
18	C200936	OFFSET MOTOR ARM
19	B001024	3/8”x 1” BOLT
20	B0010799	1/4”x 3/4” CARRIAGE BOLT
21	B0010835	3/8”x 1 1/4” CARRIAGE BOLT
22	B695298	MOTOR MOUNT BRACKET
23	C200935	MOTOR RAIL
24	C200937	MOTOR BASE
25	B001025	3/8”x 1 1/4” BOLT
26	C205593	MOTOR LINK
27	C205595	TENSION HANDLE
28	B027500	PLASTIC SLIDER BUSHING
29	C2080119	ENGINE BASE
30	C2080118	BATTERY/GAS TANK BASE
31	B002225	1/4”x 1 1/2” ELEVATOR BOLT
32	B001401	1/4” SERRATED FLANGE NUT
33	C2080135	BATTERY BASE SUPPORT TUBE
34	B021062	20” RUBBER TARP STRAP
35	B0274195	GAS TANK - 25 LITRES
36	C206138	LONG GUARD HINGE
37	B0010819	3/8”x 3/4” CARRIAGE BOLT
38	C206141	SHEAVE COVER
39	B0180743	B-85 BELT
40	C209140	BELT GUARD STOP
41	B001002	1/4”x 3/4” BOLT
42	B0180317	2B14.0 PULLEY - 1” BORE
43	C213137	PLASTIC BELT GUARD
44	C206142	SHORT GUARD HINGE
45	C206252	MOTOR TORQUE ARM
46	C2100152	PLASTIC BATTERY BOX
47	B028217	1/4” MPT x MALE TANK ADAPTER
48	B028218	FEMALE TANK ADAPTER x 5/16” HB FITTING
49	B024150	1/4” HOSE CLAMP
50	C200650	1/4” GAS LINE x 60”
51	B001028	3/8”x 2” BOLT
52	C204152	BELT REST
53	C2120012L	ENGINE SHIELD - LOWER
54	C2080140	GAS TANK RETAINER
55	B0274196	FUEL GUAGE
56	B0274197	FUEL GUAGE GASKET
57	B0274198	TANK CAP
58	C2120012U	ENGINE SHIELD - UPPER

PTO DRIVE KIT - GRAIN BELT CONVEYOR
SERIAL NOS. 106000 - 109499

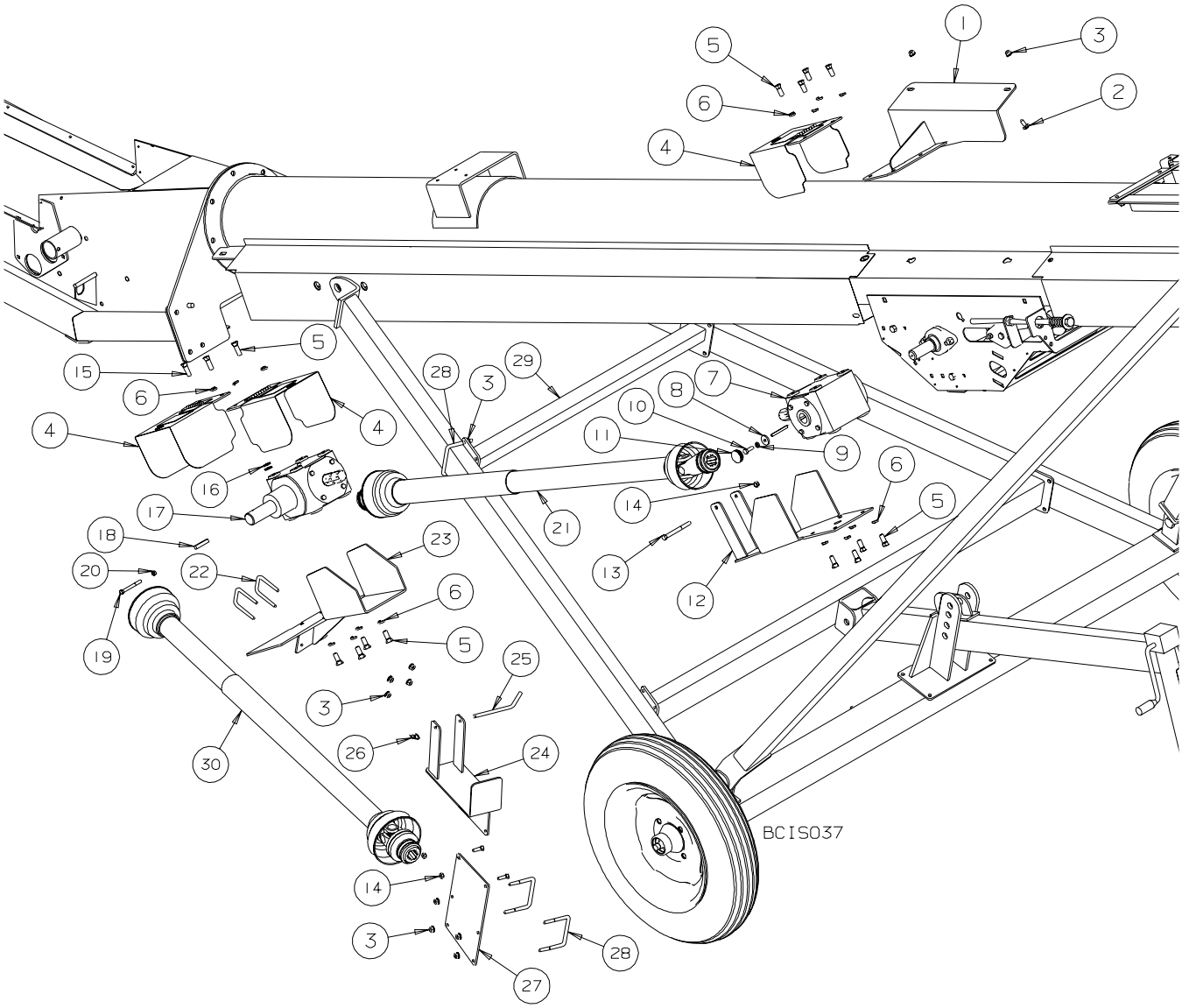

REF #	PART NO.	DESCRIPTION
1	C205584	Upper Gearbox Mount
2	B001082	3/8”x 1” Carriage Bolt
3	B0011326	3/8” Flange Lock Nut
4	C205651A	PTO Guard Assembly
5	B001039	1/2”x 1” Bolt
6	B001167	1/2” Lockwasher
7	B0030294	Upper Gearbox - 1:1
8	C205373	Key Stop Washer
9	B001165	3/8” Lockwasher
10	B001024	3/8”x 1” Bolt
11	B0281874	1 1/2” Plastic Plug
12	C205603	Upper Gearbox Lower Guard
13	B001035	3/8” x 4” Bolt
14	B0011325	3/8” Stover Lock Nut
15	B001040	1/2”x 1 1/4” Bolt
16	B001152	1/2” SAE Flatwasher
17	B0030295	Lower Gearbox - 1:1.3
18	C200649	3/8”x 2” Key
19	B001017	5/16”x 3” Bolt
20	B001127	5/16” Lock Nut
21	B0030605	Connecting PTO Shaft - 6 Spline both ends
22	B0020135	3/8”x 2” x 3” Sq. U-Bolt (1535 only)
22	B0020168	3/8”x 2 1/2” x 3 3/4” Sq. U-Bolt (1545 only)
23	C205585	Lower Gearbox Mount
24	C205586	PTO Shaft Holder
25	B496655	PTO Keeper Pin
26	B002094	.094” x 2 1/4” Hair Pin Clip
27	C205389	PTO Holder Extension
28	B0020162	3/8” x 4” x 3” Sq. U-bolt
29	C201306	35’ Torque Arm (1535 only)
29	C201255	45’ Torque Arm (1545 only)
30	B003060	Driving PTO Shaft - 6 Spline x 1 1/2” dia Bore

HYDRAULIC DRIVE KIT - GRAIN BELT CONVEYOR
SERIAL NOS. 106000 - 109499

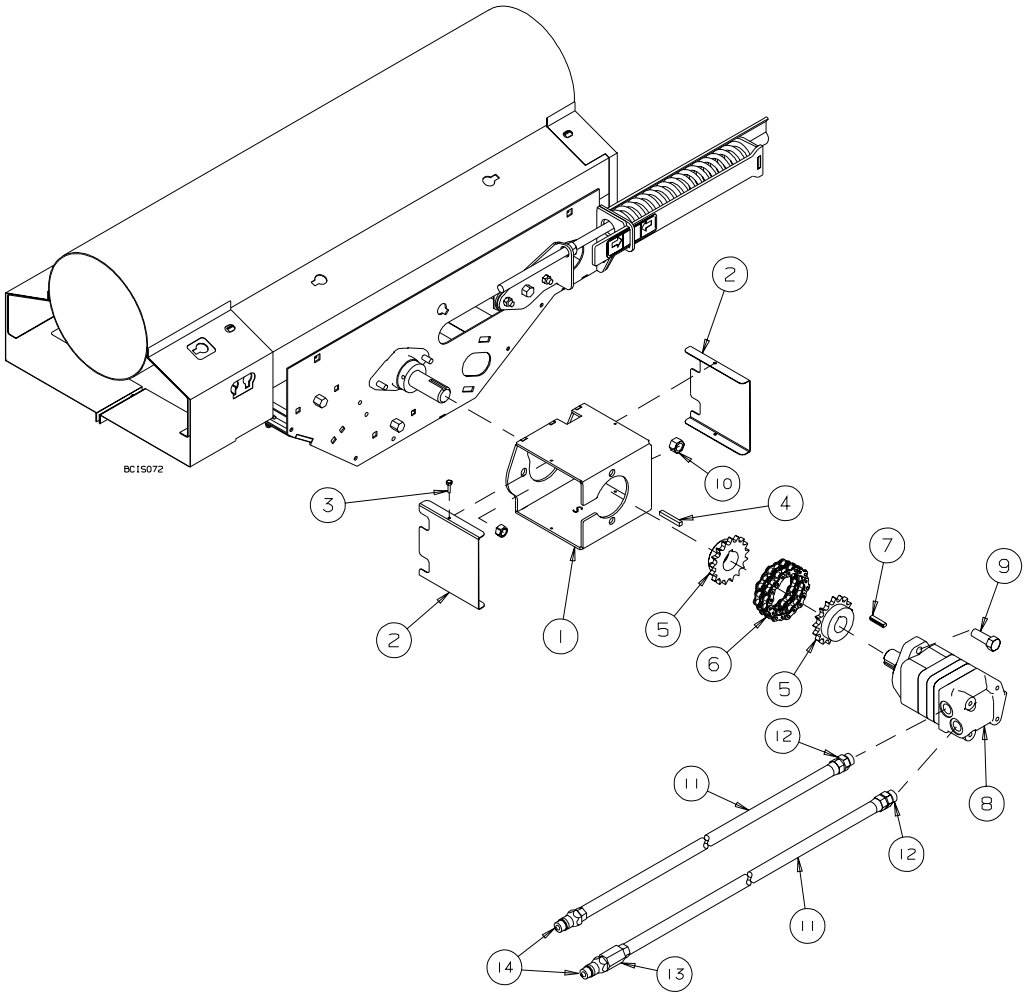

REF #	PART NO.	DESCRIPTION
1	C203111	Hydraulic Motor Mount
2	C203112	Hydraulic Motor Guard
3	B002036	#10 x 5/8” TEK Screw
4	C300708	1/4” x 1” Key
5	B009409	50- 17 Sprocket - 1 1/4” Bore
6	B009601	R50-2 Chain - 17 pitch
7	C200952	Offset Key - 1/4” x 5/16” - 1 1/4” lg.
8	B019047	Hydraulic Motor
9	B001041	1/2” x 1 1/2” Bolt
10	B001134	1/2” Stover Lock Nut
11	B0191477	1/2” Hydra. Hose x 25’ - 1/2” MPT x #10 FJIC
12	B0194345	#10 MORB x #10 MJIC Adapter
13	B019537	One Way Check Valve - 1/2” MPT x 1/2” FPT
14	B019200	Male Pioneer Tip - 1/2” FPT

WEASLER SERIES 14R
B003060 - BELT CONVEYOR - SIDE DRIVE

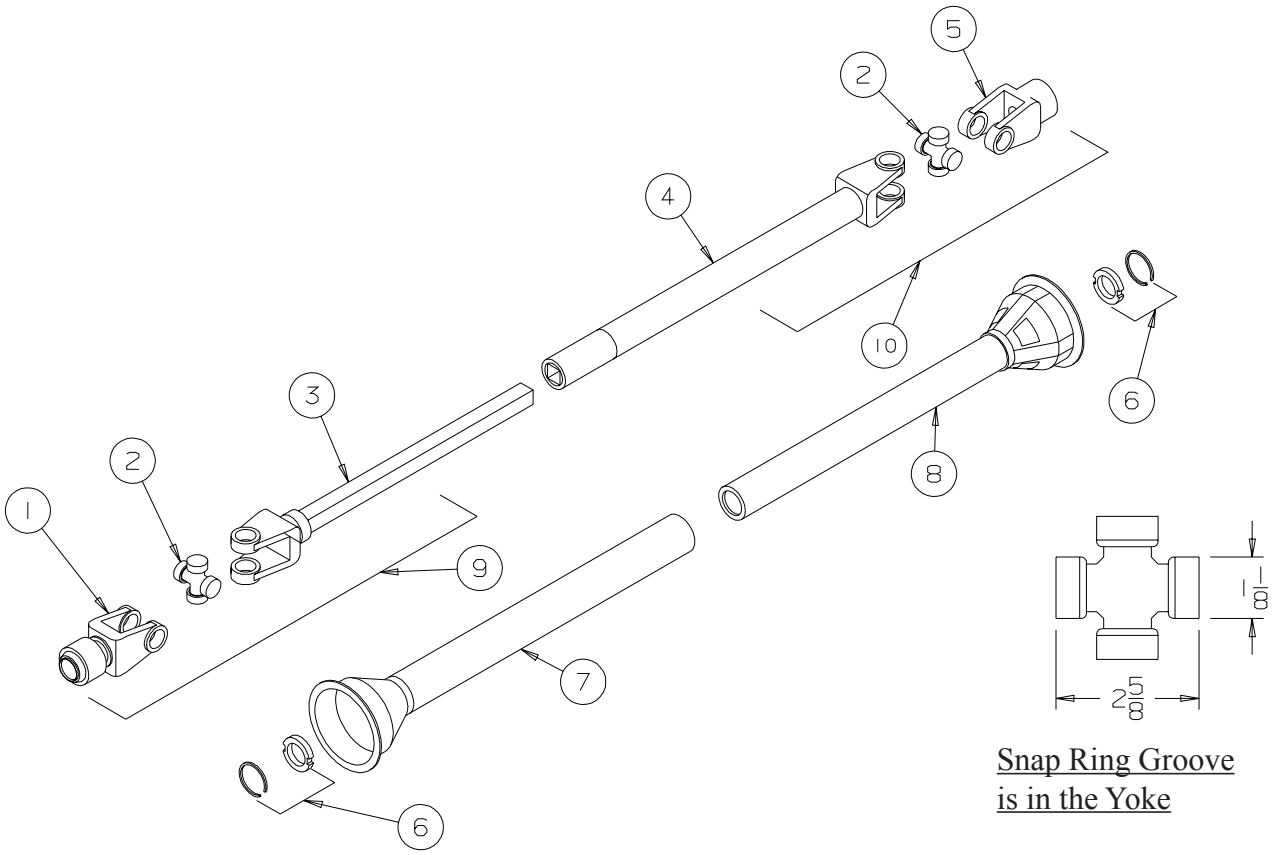

REF #	PART NO.	DESCRIPTION	QTY.
1	B003772	Tractor Yoke - 6 Spline	1
2	B0037101	Cross & Bearing Kit	2
3	B003853	Input Yoke & Shaft	1
4	B003854	Output Yoke & Tube	1
5	B003855	Implement Yoke - 1 1/2” Bore	1
6	B003776	Shield Bearing	2
7	B003857	Outer Shield	1
8	B003858	Inner Shield	1
9	B003850	Tractor Half of Shaft c/w Guard - 6 Spline	1
10	B003851	Implement Half of Shaft c/w Guard	1

WEASLER SERIES 14R
B0030605 - BELT CONVEYOR - PTO DRIVE CONNECTING SHAFT

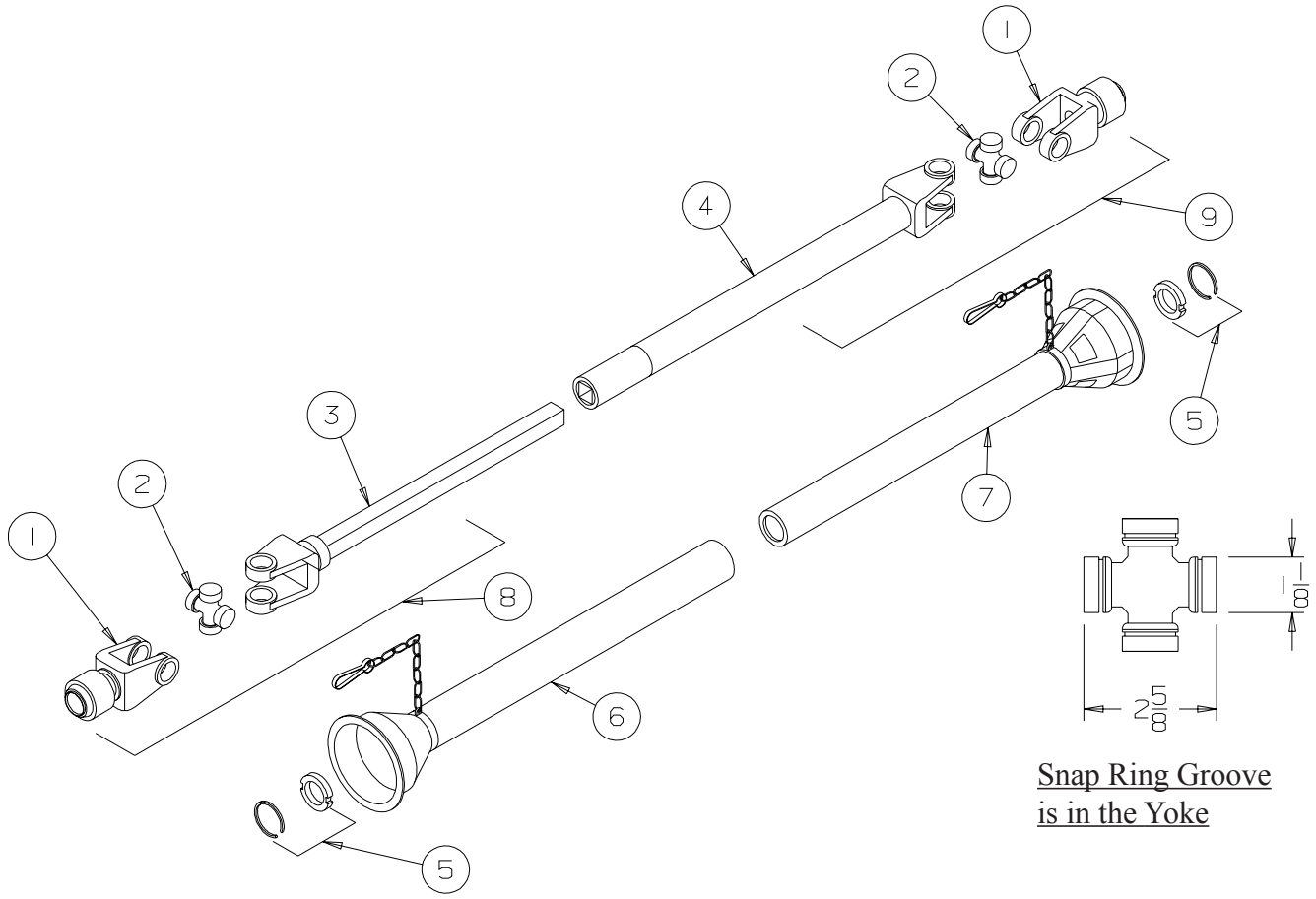

REF #	PART NO.	DESCRIPTION	QTY.
1	B003772	Yoke - 6 Spline	1
2	B0037101	Cross & Bearing Kit	2
3	B003923	Input Yoke & Shaft	1
4	B003924	Output Yoke & Tube	1
5	B003776	Shield Bearing	2
6	B003927	Outer Shield	1
7	B003928	Inner Shield	1
8	B003920	Shaft Half of Shaft c/w Guard - 6 Spline	1
9	B003921	Tube Half of Shaft c/w Guard - 6 Spline	1

WEIGHT TRANSFER KIT - GRAIN BELT CONVEYOR
SERIAL NOS. 106000 - 109499

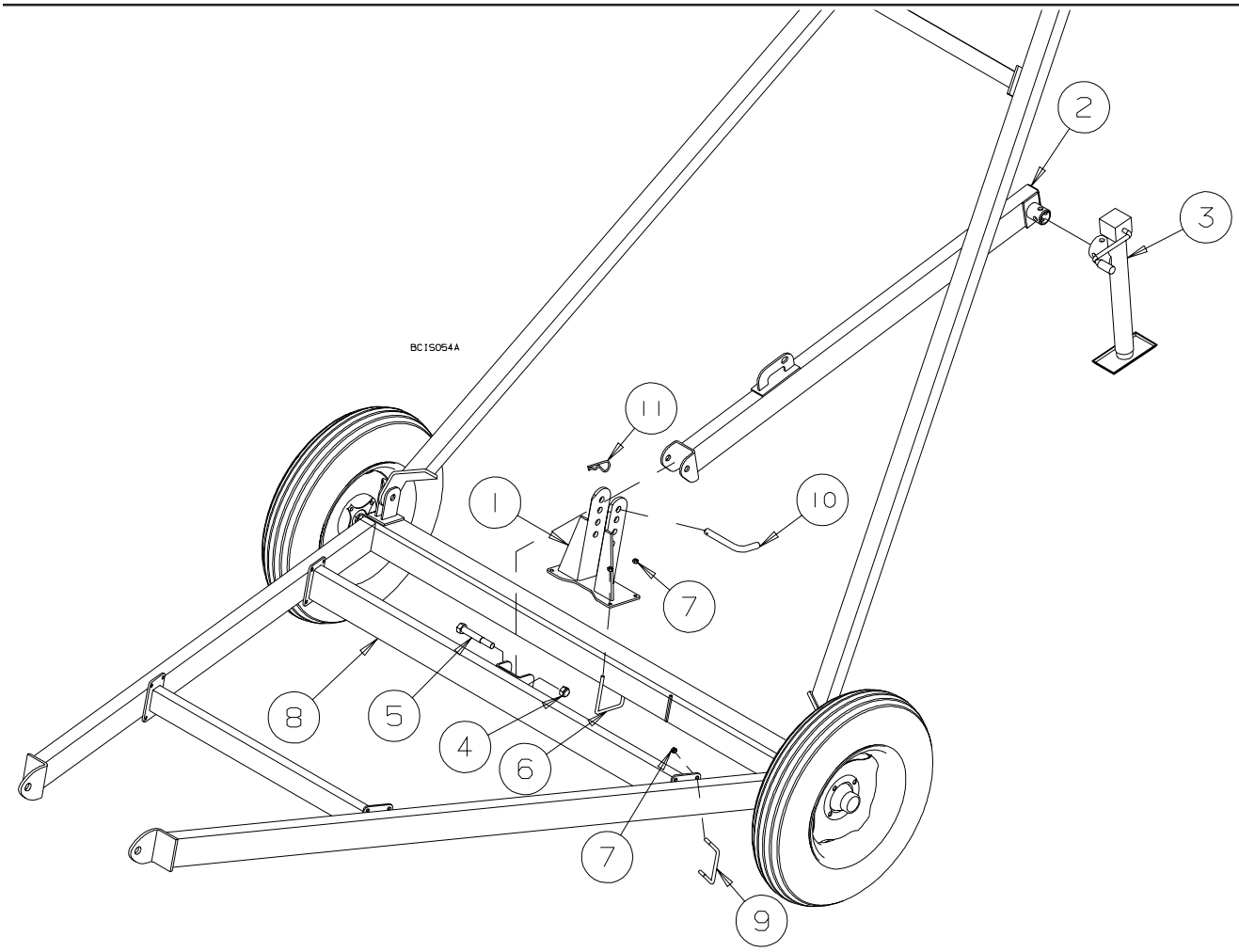

REF #	PART NO.	DESCRIPTION
1	C200955	WEIGHT TRANSFER PIVOT
2	C200957	WEIGHT TRANSFER ARM
3	B030520	IMPLEMENT JACK- 2000 LBS- 15” SIDE WIND
4	B001154	3/4” STOVER LOCK NUT
5	B001110	3/4”x 5” BOLT
6	B002016	3/8”x 4” U-BOLT x 5 5/8”
7	B011325	3/8” STOVER LOCK NUT
8	C201247	35’ WEIGHT CROSS
8	C201248	45’ WEIGHT CROSS
9	B0020162	3/8”x 4” U-BOLT x 3”
10	C201241	WEIGHT TRANSFER PIN
11	B002091	.177” x 3 3/4” HAIR PIN CLIP